United States
Department of
Agriculture

**Intermountain
Forest and Range
Experiment Station
Ogden, UT 84401**

Research Note
INT-348

October 1984

A Passive Aerial Barrier Trap Suitable for Sampling Flying Bark Beetles

Richard F. Schmitz[1]

ABSTRACT

An inexpensive, 4-lb (1.8-kg), omnidirectional passive barrier trap of clear Plexiglas is used to census flying bark beetles, especially the mountain pine beetle, Dendroctonus ponderosae. *The lightweight plastic components allow three traps to be suspended from a single vertical nylon line, using only tree limbs for support, at levels ranging to midcrown. The vertical line, with trap, is supported by a nylon line positioned in adjacent tree crowns with a bow and arrow or line gun. The design does not use sticky trapping surfaces, thereby eliminating the need to restick traps and reducing the time needed to recover and identify the catch. Insects caught during one season by order were Coleoptera 49 percent (Scolytidae 18 percent), Hemiptera 14 percent, Diptera 14 percent, Hymenoptera 8 percent, Lepidoptera 8 percent, Homoptera 4 percent, Neuroptera 1 percent, and Orthoptera, Ephemeroptera, and Trichoptera <1 percent.*

KEYWORDS: Scolytidae, bark beetles, omnidirectional passive barriertrap, *Dendroctonus ponderosae*, associated insects

Determining the relative abundance of in-flight populations of the mountain pine beetle (*Dendroctonus ponderosae* Hopkins) (Coleoptera: Scolytidae) is one measure of the effectiveness of partial cuts designed to reduce tree killing in lodgepole pine stands. The population measurements require a suitable passive trap (Schmitz and others 1980). Little is known of the vertical stratification of flying populations of the beetle, except that within 20 ft (6 m) of the ground most fly 8 to 16 ft (2.4 to 4.9 m) above ground (Avis 1971). Tree heights exceeded the 20-ft (6-m) level because the partial cuts were made in mature lodgepole pine stands. Consequently, there was need to determine whether beetles flew above the 20-ft stratum. This required a trap suitable to intercept in-flight populations at three heights ranging to midcrown without using attractants that might disrupt the natural distribution or density of the populations to be measured.

Specifically, the desired measures required an inexpensive passive trap with a barrier surface area comparable to existing designs. But the traps needed to be lighter so that several could be suspended from a single support, without need to climb the support tree or erect bulky or expensive supporting apparatus. Additionally, the trap would need to be left unattended for a week at a time and still preserve the catch in a readily identifiable condition. Yet it had to be portable and sufficiently durable for transporting to remote forest locations and assembling without tools.

In general, window and sticky traps have proven most effective for sampling flying scolytids (Chapman and Kinghorn 1955; Juillet 1963; Hosking and Knight 1975; Hosking 1979). However, sticky traps require almost daily attention to maintain the sticky surface and remove catches; hence, they were not satisfactory

[1]Research entomologist at the Intermountain Forest and Range Experiment Station, Forest Service, U.S. Department of Agriculture, Ogden, Utah.

The use of trade, firm, or corporation names in this publication is for the information and convenience of the reader. Such use does not constitute an official endorsement or approval by the U.S. Department of Agriculture of any product or service to the exclusion of others that may be suitable.

for use in this study. More recent barrier trap designs have replaced glass with plastics (Hines and Heikkenen 1977; Moeck 1980; Wilkening and others 1981; Younan and Hain 1982) or lightweight metal (Furniss 1981). Use of plastic for the barrier surface reduced overall trap weight. Even so, those trap designs were not usable for in-flight measures at three heights because their weight required they be suspended from a fixed support (Hines and Heikkenen 1977; Younan and Hain 1982). This support was attached to a sturdy branch on a live tree, and a person had to climb the tree and remove limbs beneath the branch chosen as the support. This system was unsuitable for the intended use of the traps because trees injured by limb removal would likely attract flying beetles, and the time required to hang such traps was prohibitive. Other traps have been modified to disperse synthetic pheromones (Moeck 1980; Furniss 1981; Lindgren 1983), but their configuration was not suited to intercepting bark beetles without these attractants. No traps, therefore, met all the requirements, especially those of weight and cost, imposed by the current study.

My design differs because it eliminates major metal components integral to other designs. This results in a lighter weight trap that permits three units to be suspended from the same nylon line using only tree limbs for support, but does not require that trees be climbed or branches removed to arrange support lines. Use of inexpensive, readily available plastic containers for collection and containment devices, rather than commercially available plastic or metal funnels, reduced unit cost to half that specified for traps of similar size and design (Wilkening and others 1981; Younan and Hain 1982). The trap has been used successfully since 1979 with only minor modification.

TRAP DESIGN

The trap consists of three components: (1) two Plexiglas panels positioned at right angles form the barrier surface (fig. 1A); (2) four funnellike collectors bolted to the base of the panels (fig. 1B); and (3) four plastic bottles to contain trapped insects attached to screw-type lids fitted to the base of the funnels (fig. 1C). The panel arrangement provides a maximum intercepting area above the funnels of 3.8 ft^2 (0.36 m^2). Insects strike the Plexiglas panels, cease flying, dropping into the funnels and then into the plastic bottles that are partially filled with water to prevent the beetles' escape. The bottles containing the catch are then unscrewed from the lids and emptied into a wire strainer to separate the insects from the water.

The assembled trap weighs 4 lb (1.8 kg), allowing it to be suspended within the forest canopy from lightweight nylon lines supported by tree limbs. This eliminates the need for towers or other supporting apparatus. The collecting component eliminates need for frequent tending, as is required with traps using motor-driven nets or sticky-type trapping surfaces that frequently must be cleaned of windblown debris. Additionally, this component retains the daily catch without the damage to specimens that normally results from prolonged confinement. This facilitates identification. A 5 percent solution of sodium azide is added to the water in the collecting bottles to prevent growth of bacteria and mold when the interval between collections exceeds a week.

The design has several advantages over the conventional single barrier window trap. Untethered, the trap serves as an omnidirectional barrier in contrast to the bidirectional barrier surface provided by the window trap. When tethered to prevent trap rotation, or affixed to a stationary support, the trap—which has four independent collection and containment systems—could be used to assess the direction of response of the insects caught.

Trap components are readily available, durable, convenient to transport and store, require only periodic cleaning to maintain their effectiveness, and can be assembled without tools. Current cost of components for one trap is $11.50 (U.S.). Because panels are ordered precut, the time required to fabricate the remaining components is one-half hour per trap.

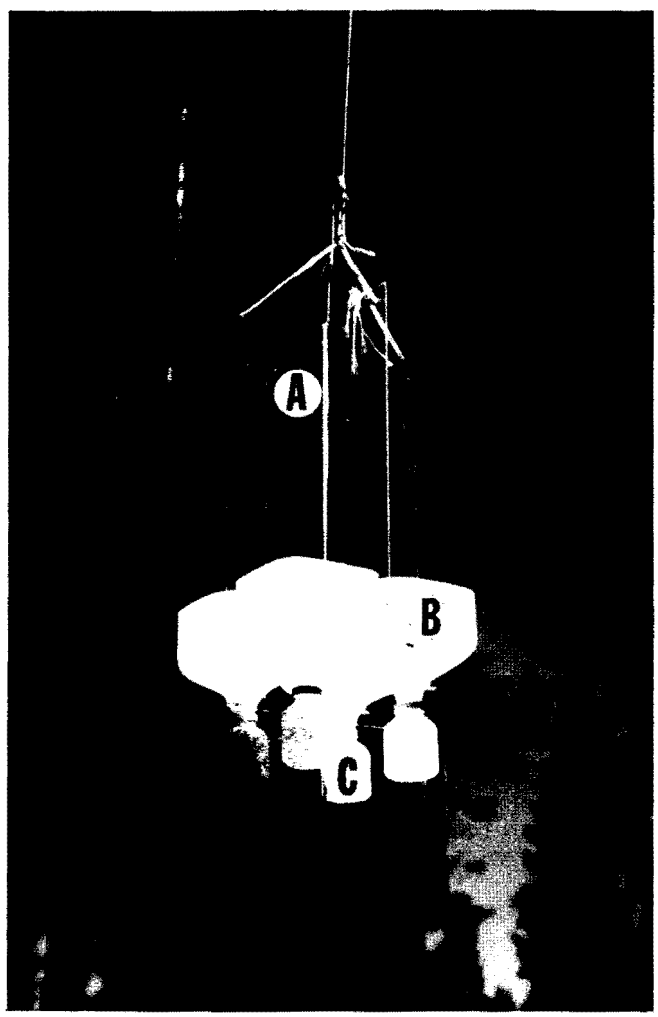

Figure 1.—Omnidirectional passive barrier trap consisting of (A) two Plexiglas panels positioned at right angles; (B) four funnellike collectors bolted to the base of the panels; (C) four plastic bottles to contain trapped insects.

CONSTRUCTION DETAIL

The barrier surface consists of two ⅛-inch-thick (3.1-mm) Plexiglas panels 11.75 inches wide by 22.5 inches high (29.8 by 57 cm) (fig. 2A). A slot ⅛ inch wide (3.1 mm), cut through the center of the long dimension of each panel from the top to the midpoint, allows two panels to be slipped together at right angles. The panels are held in position by the top half of four 1-gal (4.5-liter) plastic milk containers 6 inches (15.2 cm) square fastened to them with four stove bolts ⅝ inch by 7/32 inch in diameter (15.8 by 5.5 mm) (fig. 2B). The bolts are inserted through ¼-inch (6.3-mm) diameter holes positioned 3 inches (7.4 cm) from the outside edge and 5.5 inches (13.9 cm) from the bottom of each panel (fig. 2). By drilling these holes in both ends of each panel, the panels are interchangeable.

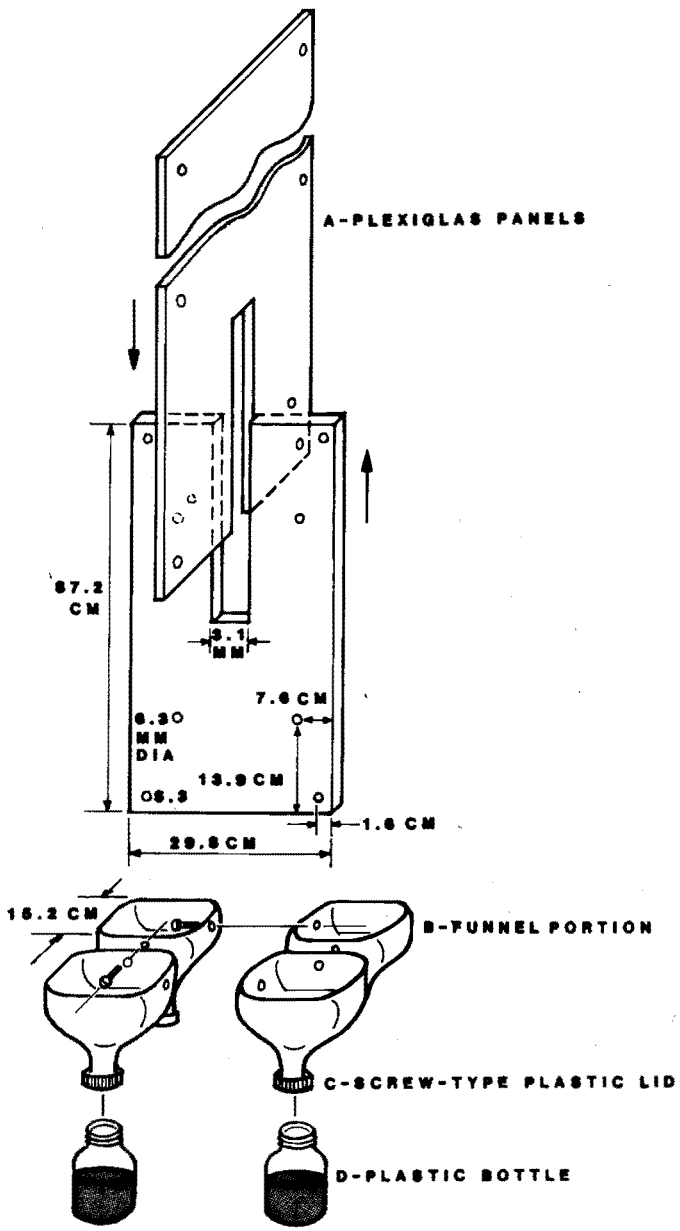

Figure 2.—Schematic of construction details of omnidirectional passive barrier trap: (A) Plexiglas panels; (B) funnel portion; (C) screw-type plastic lid to attach collecting bottle to funnel; (D) plastic bottle for containing trapped insects.

The neck of each funnel is fitted with a screw-type plastic lid to allow an 8-oz (0.28-liter) plastic bottle to be screwed onto the neck (fig. 2C, D). This bottle contains the trapped beetles. Four small holes, 1/32 inch (0.8 mm) diameter, punched in the sides of each bottle with a dissecting probe approximately 1.25 inch (3.1 cm) from the bottom, allow excess rainwater to drain from the bottles. Holes ¼ inch diameter (6.3 mm) drilled in the corners of each panel, ¾ inch (1.9 cm) from each edge, provide a means for attaching the 7/32-inch (5.5-mm) diameter nylon cord used to suspend the trap (fig. 2).

Funnels are cut from the top half of 1-gal plastic milk containers. Dimensions of the funnels are 6 inches square and 6 inches high, measured from the top edge of the side wall to the base of the neck. Approximately half the height of the lip at the apex of the bottleneck, which normally holds the snap lid in place, is removed to allow the collecting bottle to be screwed into its threaded cap far enough to hold it securely to the funnel (fig. 3A). Prior to attachment of the screw cap to the funnel, a hole 1.25 inch diameter is drilled through the center of the plastic screw lid [1.5 inch diameter (3.8 cm)] of the 8-oz collecting bottle so that it can be slipped over the funnel neck (fig. 3D). To facilitate attaching the lid, the neck of the funnel is scored with four 3/16-inch-wide (4.7-m) saw cuts, approximately 7/32 inch deep, spaced equidistant around the neck. The cuts permit the neck to momentarily be compressed to a smaller diameter to allow the inverted lid with a 1.25-inch diameter hole to slip over the neck of the funnel. When pressure is released, the funnel neck expands to its original diameter. This ensures that the lid fits tightly around the funnel neck above the lip, preventing the lid and attached bottle from slipping off the end of the funnel (fig. 3C). Holes in the collecting bottle lids are made with an adjustable hole saw. Plexiglas is cut with a table saw fitted with a blade for cutting plastics.

TRAP DEPLOYMENT

In use, three traps were tied to loops knotted in each vertical 7/32-inch (5.5-mm) diameter nylon line suspended over a pulley that was fastened to a horizontal support line of the same diameter (fig. 4A). Trees selected to support the horizontal line were chosen to ensure that the distance between adjoining edges of their crowns was at least 15 ft (4.6 m). This resulted in an opening of sufficient size to allow the vertical line supporting the traps to be positioned without becoming tangled in their branches.

The 7/32-inch diameter nylon horizontal support line was generally too long and heavy to position in the tree crowns without first shooting a lighter weight pilot line into position that could then be used to pull the nylon line into position. Consequently, a 15-lb (5.6-kg) test monofilament nylon line was first shot into position with a bow and arrow or Easy Liner line gun. A swivel

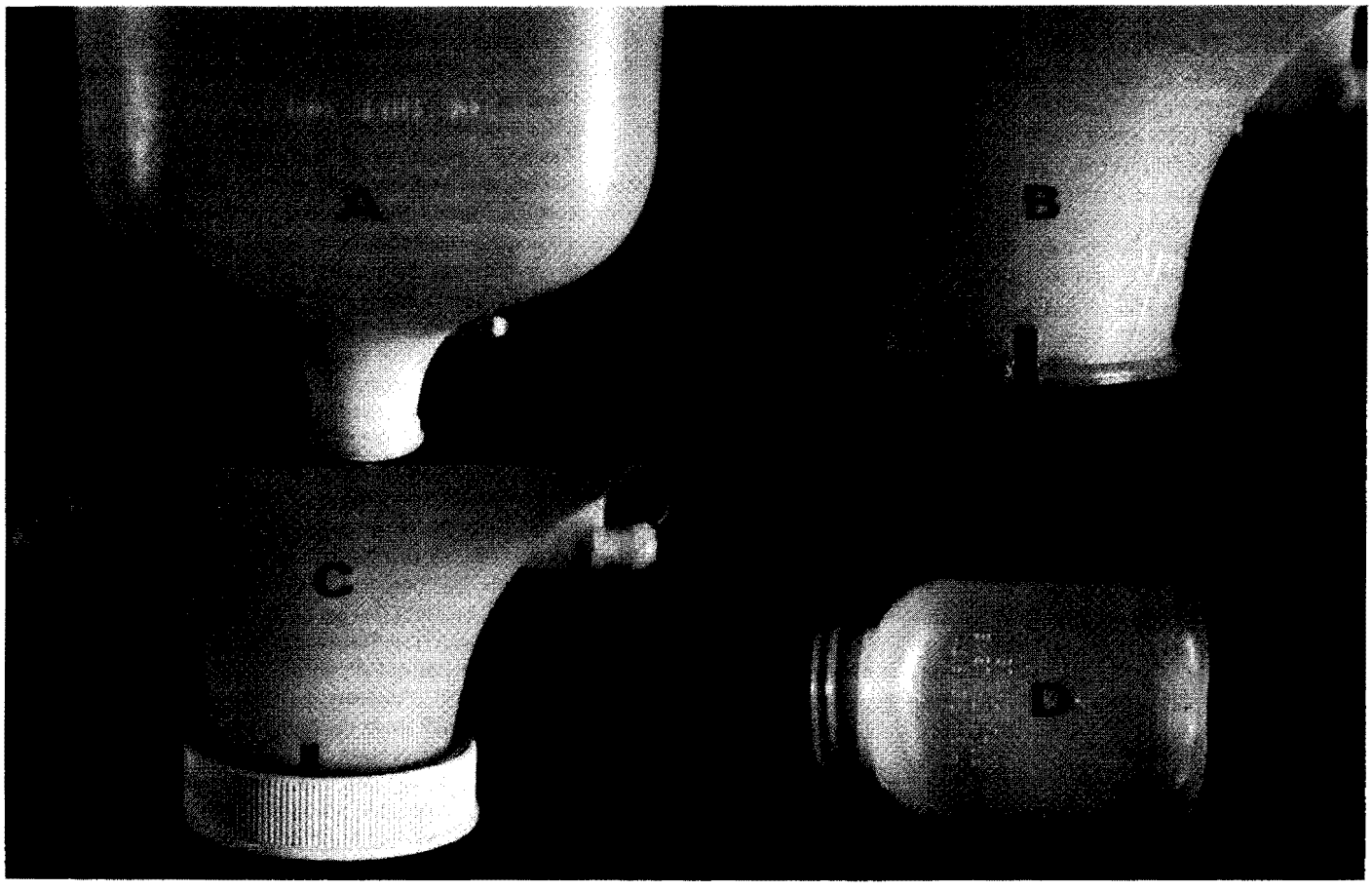

Figure 3.—Construction detail depicting method for attachment of lid of plastic collecting bottle to funnel: (A) top portion of plastic milk container (funnel) showing untrimmed container neck (arrow); (B) container showing neck with 3/16-inch-wide (2-mm) saw cuts (arrow) allowing neck to be compressed so that lid used to attach collecting bottle (D) can be slipped over funnel neck; (C) funnel with lid in place.

clip was tied to the end of the pilot line to simplify the task of attaching the arrow or line gun projectile and to allow them to spin in flight without twisting the line. The swivel was clipped to a loop of 20-lb (7.5-kg) test monofilament line threaded through a 1/16-inch (1.6-mm) diameter hole in front of the nock on the arrow shaft. The line gun projectile has a wire loop for attaching the swivel. The other end of the line was tied to a closed-face spinning reel, taped to the bow, to permit the line to be expelled and retrieved without tangling. The line gun employs a plastic projectile propelled by a .22-caliber rifle charge (industrial-type power load), in place of the arrow, and was better suited to placing lines when trees were taller than 90 ft (27.4 m).

Once the monofilament line was in place over or within the tree crowns, and the arrow or projectile with the monofilament line attached was on the ground, the 7/32-inch diameter nylon line was tied to the monofilament line and pulled back through the supporting tree crowns by winding the monofilament line on the spinning reel. A second line was then shot over the horizontal support line stretched across the opening between the crowns so that the support line could be pulled to the ground. A pulley was then attached and the vertical line supporting the traps was placed through the pulley. The two loose ends of the horizontal support line were then pulled taut and the pulley and vertical line positioned in the center of the opening between crowns. The two loose ends were then tied to the boles of the support trees to maintain tension.

Three traps were then tied to loops knotted in each vertical 7/32-inch diameter nylon line. The loops were positioned so that the topmost trap was located at mid-crown, midway between the extremities of the live crown; a second at midbole, midway between the ground and the bottom of the live crown; and the bottom trap 6 ft (1.8 m) above ground level. The end of the vertical line beneath the bottom trap was tied to a log on the ground to maintain placement of the vertical line. Once in position, the traps were maintained at the proper height by tying the opposite end of the vertical line to a nearby tree.

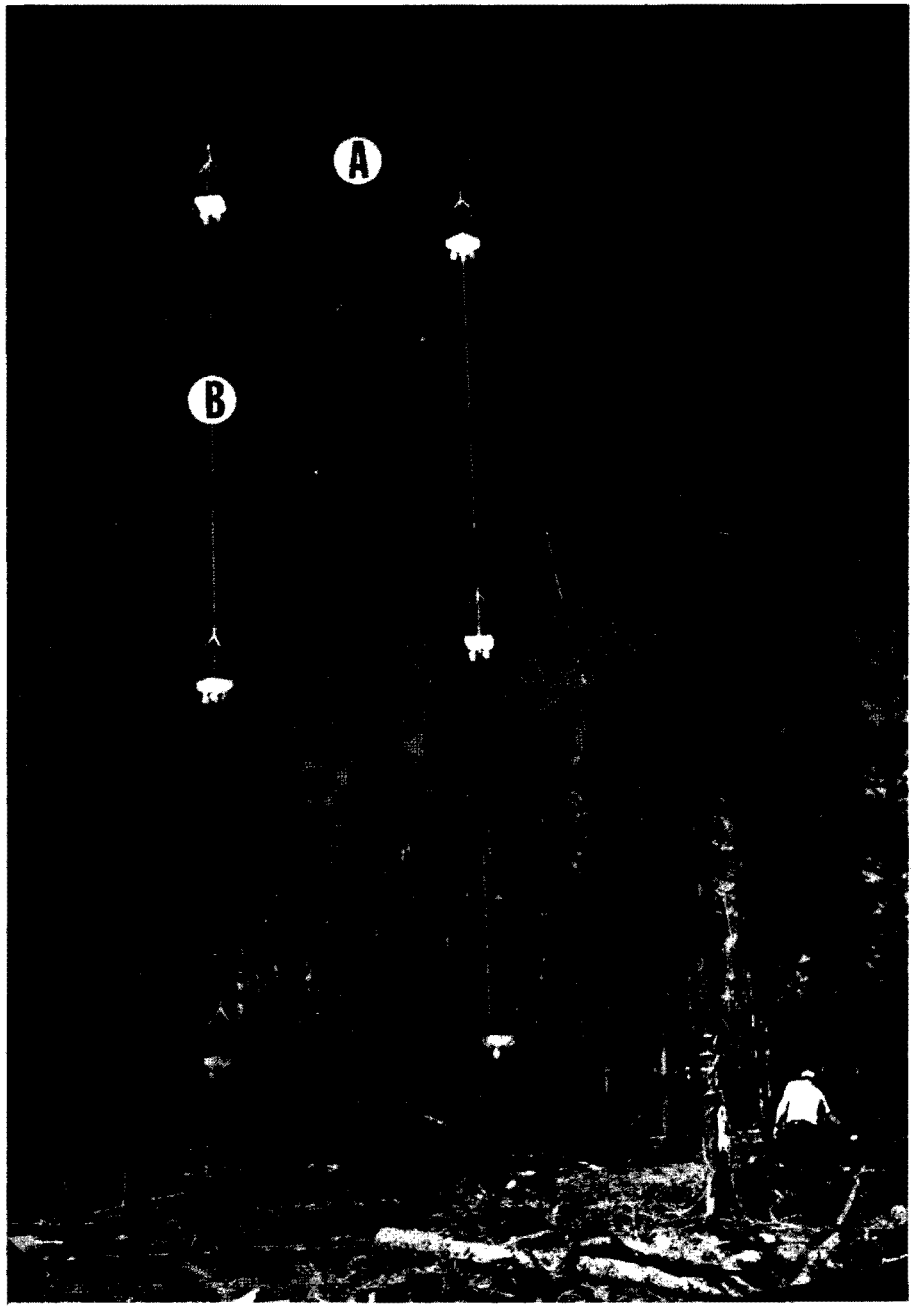

Figure 4.—Deployment of omnidirectional passive barrier trap: (A) horizontal support line with pulley for attachment of vertical line; (B) vertical line used to raise and lower traps, with tree traps attached.

TEST LOCATION AND DURATION

To evaluate the traps' effectiveness for determining the relative abundance of bark beetles, 120 traps were hung in 10 mature lodgepole pine stands infested by outbreak population levels of the mountain pine beetle. The 10 stands were on three National Forests in western Montana, including the Kootenai National Forest near Libby, the Lolo National Forest near Thompson Falls, and the Gallatin National Forest near West Yellowstone. Trapping was conducted during the seasonal flight of the mountain pine beetle. The onset and termination of seasonal flight varied by site, but was within the period July 2 to August 22, 1980. The number of traps deployed and the duration of flight at each site resulted in 2,502 trap days.

EVALUATION OF TRAP CATCH

Scolytidae

Effectiveness of this trap for assessing the relative abundance of in-flight populations of bark beetles was evaluated by comparing the proportion of scolytids trapped to other taxa of insects with the proportions caught during evaluations of the other passive barrier-type traps referenced earlier. A total of 8,757 insects were caught by the 120 traps between July 2 and August 28, 1980, at the 10 study sites (table 1). Of all the orders trapped, Coleoptera were caught most frequently: 49 percent of the total (table 1). Within this order, Scolytidae was the single most abundant family trapped, 37 percent of all the Coleoptera and including eight genera other than *Dendroctonus*. Three families of beetles that commonly inhabit trees infested with bark beetles ("scolytid associates") totaled 22 percent of the coleopterans caught, while the remaining 40 percent were divided among 11 families, with Mordellidae being the most abundant.

Limiting comparison to the proportion Scolytidae represent of all Coleoptera caught, the 37 percent caught with my trap is similar to the 39 percent recorded by Hosking (1979) using window traps in a ponderosa pine stand (*Pinus ponderosa* Laws.) in New Zealand. The baffled barrier trap used by Younan and Hain (1982) in southern pine forests was superior to four other designs for trapping Coleoptera and Scolytidae. Scolytids constituted 67 percent of the Coleoptera caught by this trap. The higher percentage of scolytids caught with the baffled barrier trap is probably due to their placement in trees that had been completely severed at the root collar, making them especially attractive to scolytids. Chapman and Kinghorn (1955) used a window trap to sample flying populations of the ambrosia beetle *Trypodendron* sp. (Coleoptera: Scolytidae). They found that of 1,241 insects caught over 3 days, Scolytidae were most abundant, while other Coleoptera were the next most numerous. Hosking (1979) also determined the window trap caught more scolytids than any other family of Coleoptera. In contrast, Juillet (1963) found his glass barrier trap most effective for intercepting Diptera, although Coleoptera were the next most abundant. The fact scolytids were also the predominant insect family caught by my trap demonstrates that the design was as effective as other barrier trap designs for determining the relative abundance of this group of insects (table 2).

The need to hang traps at more than one stratum to determine relative abundance, particularly at low population levels, was verified by comparing the total catch at the three trapping heights (table 3). Most mountain pine beetles were caught at midbole (56 percent), followed by midcrown (34 percent), and the bottom position (10 percent). These results confirmed findings of an earlier study that revealed midbole traps caught the highest percentage (48 percent) of the 422 beetles trapped (Schmitz and others 1981). However, the same study found that the second highest percentage (28 percent) was caught by the lowest traps rather than midcrown, as was the case in this study. A more detailed analysis of the microenvironment of the stands involved is needed to determine the reasons for these differences.

Associated Insect Orders

The trap intercepted insects other than scolytids. The variety and abundance of insects caught during 1980 are shown in table 1. Relative abundance of insects by order was Coleoptera 49 percent, Hemiptera 14 percent, Diptera 14 percent, and Hymenoptera 8 percent. Comparison of the abundance of insects other than scolytids revealed my trap design and those barrier trap designs referenced earlier were more effective for catching Coleoptera than any other order (table 2). Hemiptera was the third most abundant taxa and the second most abundant order caught by my trap, while it was the fourth most frequently caught taxa by three designs for which the catch of insects other than Coleoptera was reported. I found Diptera to be the next most abundant (table 1), but my ranking differed from that reported for the other three designs (table 2). Variation in the number of Diptera caught by the five designs was greater than for any other order. Hymenoptera was the fifth most abundant order caught by my trap. Two of the other designs caught Hymenoptera more frequently, ranking it the third most taxa caught (table 2). Some variation in the relative abundance of these associated orders is attributable to the broad range in forest types in which the different designs were used and to the timing of the tests. Aside from the exceptions noted, the overall similarity in abundance of these insect orders suggests my trap will provide a measure of their relative abundance equal to that provided by the other barrier trap designs included in the comparison.

The trap intercepted several families of beetles normally associated with bark beetle infestations, including the predacious checkered beetles (Coleoptera: Cleridae). Not unexpectedly, the trap caught fewer of the small-bodied, lightweight associates such as the predacious flies (Diptera: Dolochopodidae) and parasitoids (Hymenoptera: Braconidae). These insects continue flying upon striking the barrier surface, gradually moving upward away from the funnels, in contrast to beetles that upon impact stop flying and drop into the funnels. These results are similar to those obtained by Younan

Table 1.—Number and percent of insects caught by 120 passive barrier traps at 10 study sites on three locations in Montana, combined, July 2 to August 28, 1980[1]

Order	Number caught		Percent of catch		Percent of Coleoptera caught
Coleoptera (combined)		4,302		49.1	
Scolytidae:					
Pityogenes spp.	512		6.0		
Dendroctonus ponderosa	391		4.0		
Pityophthorus spp.	321		4.0		
Scolytus spp.	193		2.0		
Ips spp.	166		1.9		
Trypodendron spp.	18		.2		
Hylastes spp.	8		.1		
Carphoborus spp.	3		.1		
Dryocetes spp.	3		.1		
Total:	1,615		18.5		37.6
Scolytid Associates:					
Cerambycidae	743				
Cleridae	136				
Buprestidae	81				
Total:	960		10.9		22.3
Other Coleoptera:	1,727		19.7		40.1
Hemiptera		1,286		14.7	
Diptera		1,271		14.5	
Hymenoptera		730		8.3	
Lepidoptera		683		7.8	
Homoptera		352		4.0	
Neuroptera		97		1.1	
Orthoptera		12		.1	
Ephemeroptera		3		.1	
Trichoptera		3		.1	
TOTAL		8,757		100.0	100.0

[1]The number of traps deployed and the seasonal flight period at each of the three Forests, combined, resulted in 2,502 trap days.

Table 2.—Ranking by number of specimens caught for five taxa of insects intercepted by five passive-type barrier trap designs[1]

Trap design	Coleoptera	Scolytidae	Hemiptera	Diptera	Hymenoptera
Test trap	1	2	3	4	5
Chapman 1955	1	2	4	3	5
Hosking 1979	1	2	—	—	—
Juillet 1963	1	—	4	1	3
Younan and Hain 1982	1	2	4	5	3

[1]1 = most abundant; 5 = least abundant.

Table 3.—Number and percentage of mountain pine beetles caught by 120 passive barrier traps by height and trapping location, July 2 to August 28, 1980[1]

Trapping location	Trap height						
	Bottom		Midbole		Midcrown		Total
	No.	*Percent*	*No.*	*Percent*	*No.*	*Percent*	
Gallatin NF	12	26	23	50	11	24	46
Kootenai NF	18	6	164	56	111	38	293
Lolo NF	10	19	33	64	9	17	52
Total	40	10	220	56	131	34	391

[1]The number of traps deployed and the seasonal flight period at each of the three Forests, combined, resulted in 2,502 trap days.

and Hain (1982), who found that although Hymenoptera were the second most abundant group of insects caught by their baffled barrier trap, the design was the least efficient of five designs tested for intercepting Diptera and Hymenoptera.

APPLICATION

The trap and suspension system are best suited for determining the relative abundance of Coleoptera at several heights within the canopy as might be required by pre- and posttreatment measures of population density. The traps have also been used to determine the seasonal abundance, dispersion, and flight habits of a number of scolytids associated with the mountain pine beetle. Such information is needed to determine their role in the population dynamics of the mountain pine beetle. These data are also needed to plan the timing of cutting, especially thinning, to prevent population increases of those associated scolytid species that infest fresh thinning slash and then emerge to kill crop trees in the residual stand.

SUMMARY

The modified passive barrier trap design is effective for determining relative abundance and vertical distribution of in-flight populations of bark beetles in lodgepole pine stands. The design is also effective for intercepting other insects, particularly Coleoptera. The trap weighs less than other traps of similar size and design, and that allows traps to be suspended in the upper canopy using only limbs for support. This feature permits measures of relative population density within the canopy that heretofore were unobtainable without a more elaborate support system. The passive design offers an alternative to sampling systems that require synthetic attractants for censusing in-flight populations. Synthetic attractants artificially concentrate flying populations, making it difficult to relate the catch to natural unit area densities because dispersion characteristics of the attractant and the threshold of response of the target beetles are seldom known. Additionally, the comparatively low unit cost ($11.50 U.S.) allows for placement of a greater number of traps for the same cost as more expensive designs currently in use. The system has been used for 5 years without need for modification to obtain the desired measures of relative abundance.

ACKNOWLEDGMENTS

I thank Lynn A. Rasmussen, biological technician at the Intermountain Forest and Range Experiment Station, Ogden, Utah, for his contribution to improving fabrication methods and reducing the time required to assemble a trap.

REFERENCES

Avis, R. W. Flight and attack patterns. The mountain pine beetle, *Dendroctonus ponderosae* Hopk. (Coleoptera: Scolytidae). Vancouver, BC: University of British Columbia; 1971. 58 p. M.S. thesis.

Chapman, J. A.; Kinghorn, J. M. Window flight traps for insects. Canadian Entomologist. 87: 46-47; 1955.

Furniss, M. M. An improved nonsticky trap for field testing Scolytid pheromones. Environmental Entomology. 10: 161-163; 1981.

Hines, J. W.; Heikkenen, H. J. Beetles attracted to severed Virginia pine (*Pinus virginiana* Mill.). Environmental Entomology. 6: 123-127; 1977.

Hosking, G. P. Trap comparison in capture of flying Coleoptera. New Zealand Entomology. 7: 87-92; 1979.

Hosking, G. P.; Knight, F. B. Investigations of the life history and habits of *Pityokteines sparsus* (Coleoptera: Scolytidae). Technical Bulletin 81. Orono, ME: University of Maine, Life Sciences and Agriculture Experiment Station; 1976. 37 p.

Hosking, G. P.; Knight, F. B. Flight habits of some Scolytidae in the spruce-fir type of northern Maine. Annals Entomological Society of America. 68: 917-921; 1975.

Juillet, J. A. A comparison of four types of traps used for capturing flying insects. Canadian Journal of Zoology. 41: 219-223; 1963.

Lindgren, B. S. A multiple funnel trap for scolytid beetles (Coleoptera). Canadian Entomologist. 115: 299-302; 1983.

Moeck, H. A. Field test of Swedish "drain pipe" pheromone trap with mountain pine beetle. Canadian Forest Service Bimonthly Research Notes. 36(1): 2-3; 1980.

Schmitz, R. F.; McGregor, M. D.; Amman, G. D. Mountain pine beetle response to lodgepole pine stands of different characteristics. In: Berryman, A. A.; Safranyik, L., eds. Dispersal of forest insects: evaluation, theory, and management implications: proceedings of the second IUFRO conference; 1979 August 27-31; Sandpoint, ID. Pullman, WA: Washington State University, Cooperative Extension Service; 1980: 234-243.

Wilkening, A. J.; Foltz, J. L.; Atkinson, T. H.; Connor, M. D. An omnidirectional flight trap for ascending and descending insects. Canadian Entomologist. 113: 453-455; 1981.

Younan, E. G.; Hain, F. P. Evaluation of five trap designs for sampling insects associated with severed pines. Canadian Entomologist. 114: 789-796; 1982.

☆ U.S. GOVERNMENT PRINTING OFFICE: 1984—776-032/10512 REGION NO. 8